RIEDL

EN

RIEDL Phasys

Sophisticated Simplicity in Automation

riedlautomation.com

German Tech, Italian Style

Evolution in automation: speed, reliability, accuracy and a personalized design for your pharmacy.

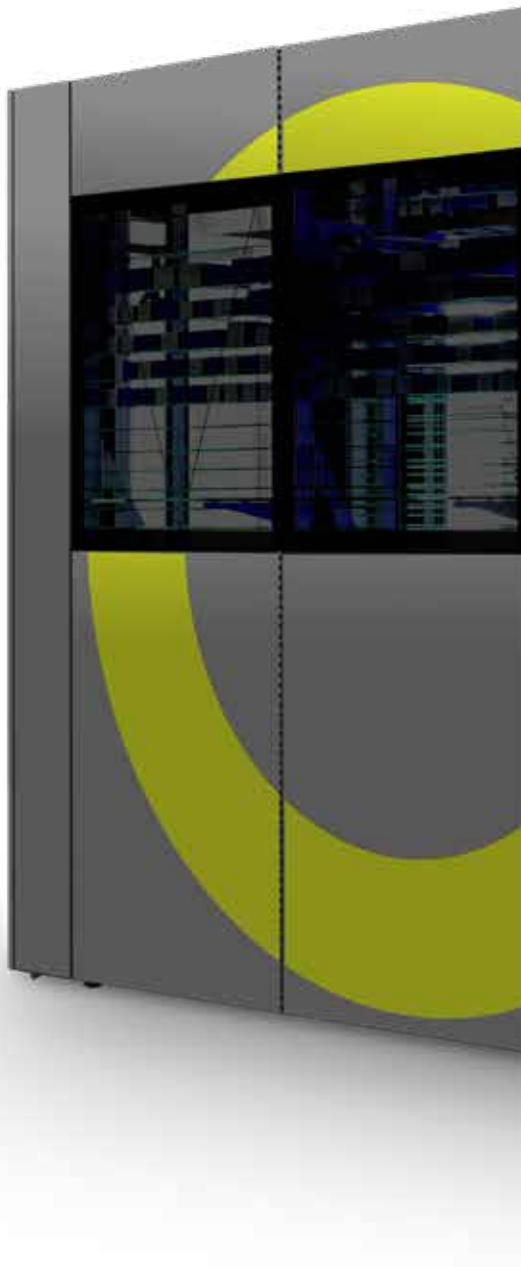

RIEDL Phasys is the system for the automated dispensing of drugs in the pharmacies, resulting from the partnership between a group of German engineers who have been working in the pharmacy automation sector for over twenty years and the GPI Group, which has been designing and developing IT solutions and services for health and social care in Italy and abroad for over thirty year.
The technology of the gripper represents the best one available on the market in terms of **speed, accuracy** and **reliability**.
The **customisation of every detail** makes RIEDL Phasys the only robot fully custom-made, according to the functional and aesthetic needs of each client.
RIEDL Phasys is one of the most advanced automation systems for pharmacies : fast, flexible, reliable.

RIEDL

Unique

Just like your pharmacy: no one is like yours.

We design and build your own RIEDL Phasys, according to your specific needs:

- it matches your style: finishes, shape, colour...
- it fits into your space: upstairs, downstairs or in a different room...
- it adapts to the daily handling of products
- it adapts to the number of workstations at the counter
- it adapts to the required capacity

The technological core becomes an integral part of the furniture.

You can choose among a wide range of finishes and colours for your RIEDL Phasys. By using the external shelves, which can be attached directly to RIEDL Phasys exterior panels, the front side of the system becomes a furnishing component, perfectly integrated in your pharmacy. Moreover, the external glass panels will let your customers enjoy the technological core of your pharmacy.

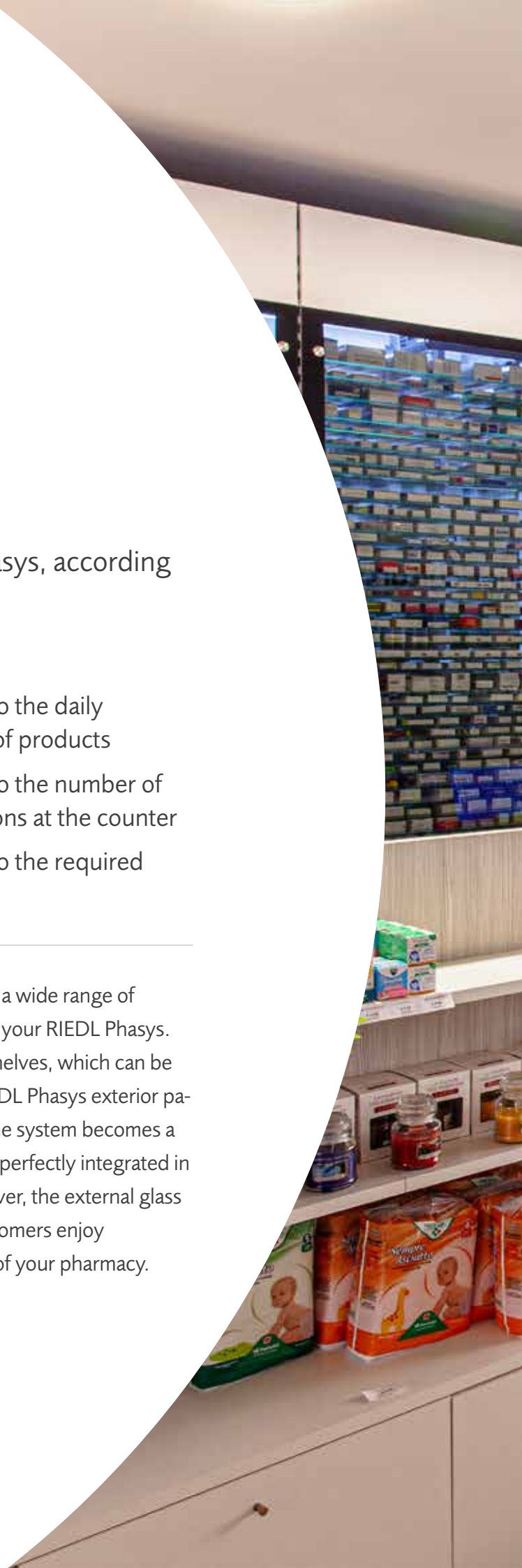

integratori
medel
MrCarrot
Miss Bibi

Have products delivered wherever you want in a few seconds.

You can customise the number and position of the outputs. Thanks to our ad-hoc delivery systems, each item can reache any point in your pharmacy (also on different floors) with an incomparable speed.

It fits into the available space.

Thanks to the different RIEDL Phasys configurations (L-U-I - Shape with built-in or external loading bay) the system can be adjusted to the structure of your pharmacy, thus being consistent with its style.

Fully customisable

Make space for your fantasy: RIEDL Phasys is so flexible that it will always find a place in your pharmacy.

Fast

Because your time is precious.

The gripper of RIEDL Phasys is bidirectional and moves through the warehouse at a speed of 5 meters per second. Each gripper can deliver from 360 to over 1,000 packs per hour, drastically reducing the processing time of dispensing requests.

No risk of falling for drugs.

The accurate handling of the packs, including round items, on both sides of the warehouse is achieved without the need to rotate the gripper, thus avoiding the risk of medicines falling.

Automatic reading of batch numbers and expiry date.

RIEDL OCR is the innovative system for the automatic reading of expiry dates when loading and it is available also for semi-automatic loading. Managing drugs has never been so easy and fast!

Non stop loading system.

The **LTL (Load-To-Light)** semi-automatic multipicking loading enables to load up to 900 packs per hour with a single belt.

RIEDL

Automatic

It can do everything on its own.

The revolutionary third generation AIS automatic loading system can work also when the pharmacy is closed: the warehouse is filled at a rate of 240 packs per hour.

Reliable

It never stops.

The groundbreaking automatic alignment of packages and shelf self-grading guarantee continuity of service, eliminating inefficencies and system downtimes.

It manages differents shapes and products

No matter if they are round or square: you choose what to put in your RIEDL Phasys, it will take care of the rest.

FITO
MAITAKE
C
Urarthone
La marca «STABILIUM»
e le denominazioni «Garum»
di registrazione internazionale

Wireless

Less cables = More freedom

The connection between the gripper and the rest of the system is via a dedicated Wi-Fi network, with no cables.The system is faster to install, simpler to use and maintain and it fits in any space.

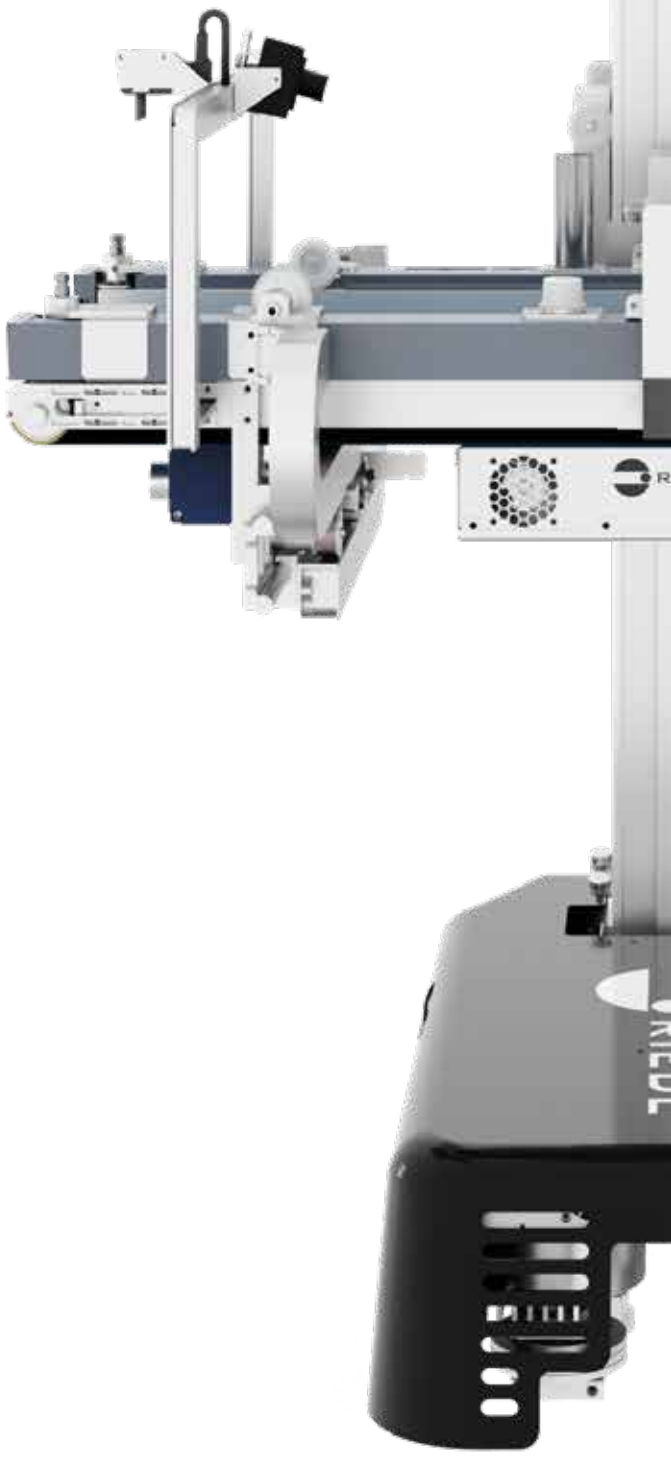

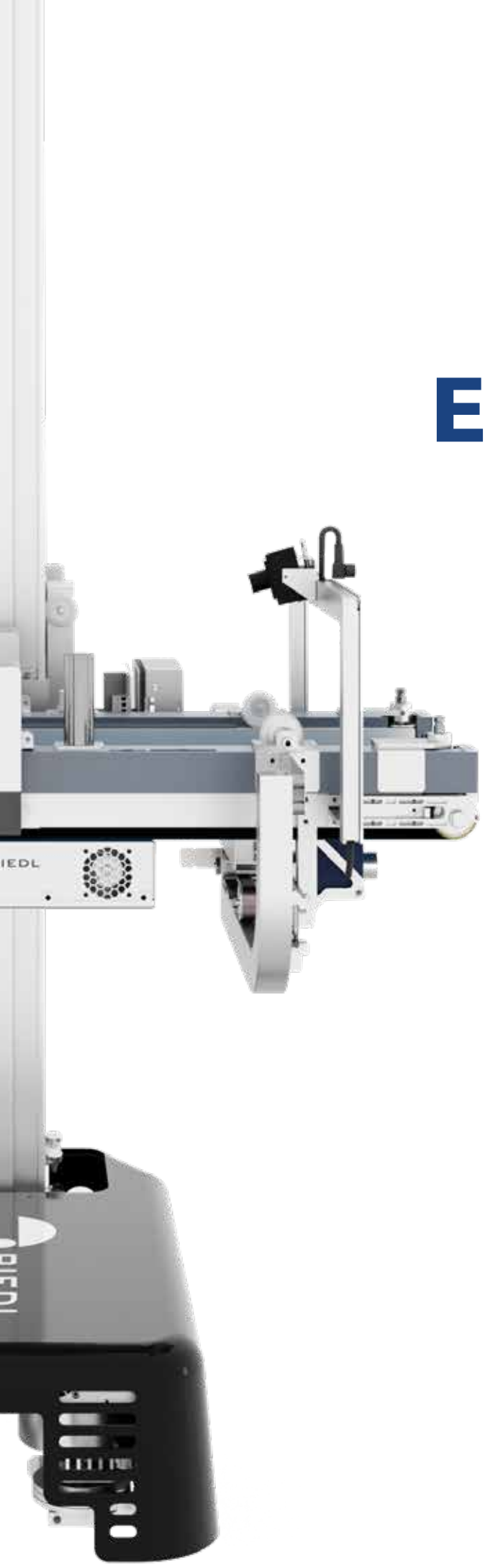

Energy-saving

A robot with a "domestic" consumption

RIEDL Phasys consumes less than half a Kw/h, as a common household. The low weight of the gripper units, the low friction and the integrated KERS technology make the RIEDL Phasys system extremely convenient (about 0,39 Kw/h of consumption). And your bill is lighter too!

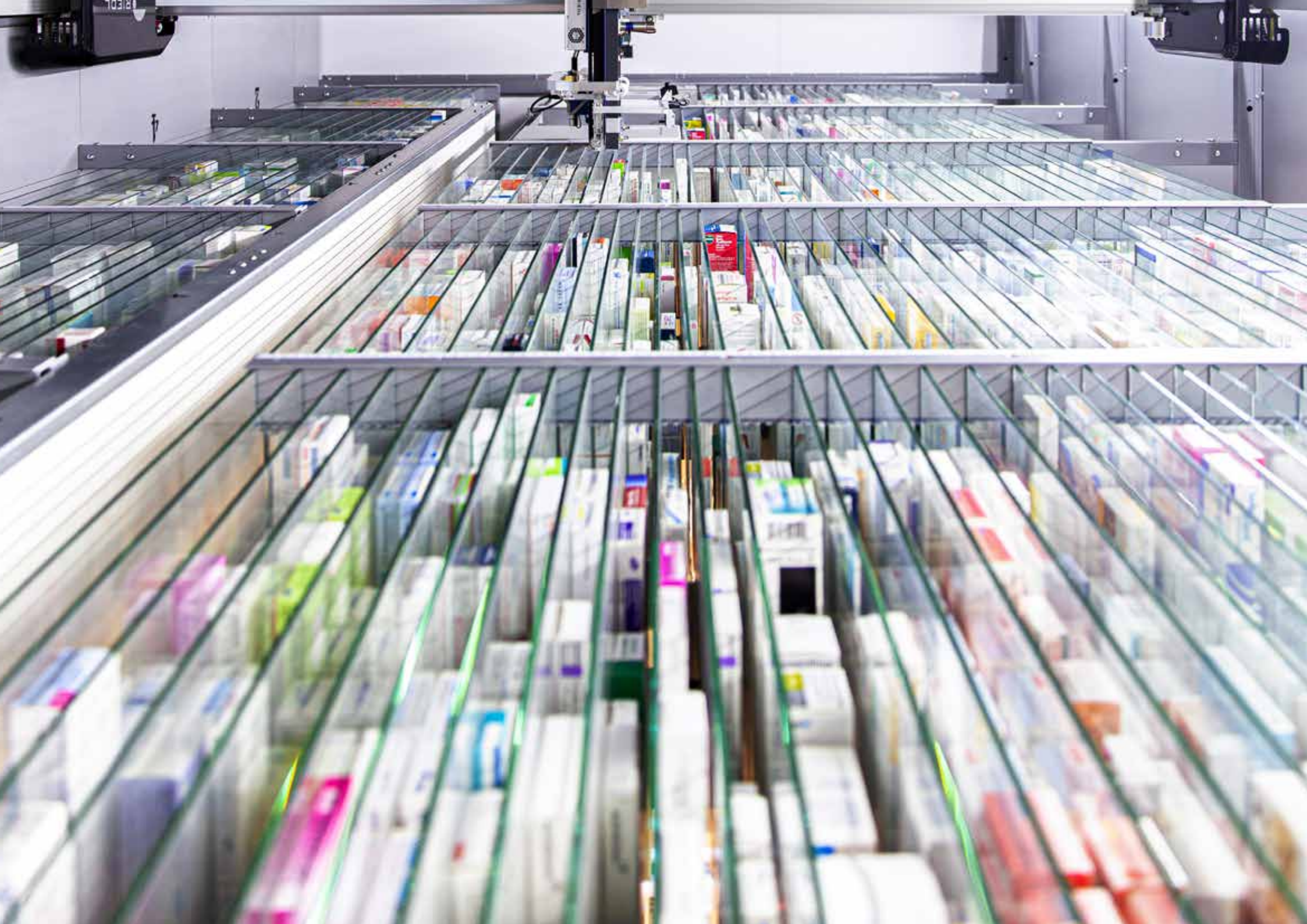

Safe

High quality, high protection.

All entries inside the machine are protected by certified security systems which, in the case of opening, instantly stop the gripper.

Low consumption

Say yes to automation, no to energy consumption: no adjustment of the electrical panel is required.

Assistance everywhere and immediately

The widespread presence of the GPI group in Italy and abroad ensures a prompt intervention and a quick request solution.

If you need assistance, we are always there!

RIEDL
RIEDL

Sophisticated Simplicity in Automation

Unique

Low energy consumption

Fast

Wireless

We are always there

Reliable

Safe

It manages several types of products

RIÉDL

GPI - Your Global Partner for a Better Future

GPI is the preferred partner for software, technologies and services dedicated to Health, Social Care and Public Administration. Founded over 30 years ago in Trento, GPI has constantly grown thanks to significant investments in M&A (in Italy and abroad) and in R&S (in partnership with the leading universities and italian research centres) in order to transfer the scientific, technological functional and process knowledges applied to e-health, e-welfare, well- being sectors. Thanks also to the solutions and the skills acquired by the companies that became part of its ecosystem, the Group has translated the drivers emerging from the world of Health Care into cutting-edge technological solutions and new service models able to optimise the processes of prevention, diagnosis and care, improving people's quality. The offer combines specialist expertise in IT and consultancy and design skills, which allow it to operate in different business areas: Software, Care, Automation, ICT and Pay. The Company ended 2020 year with its revenues amounting to of 271 million Euros, more than 7.600 employees and more than 2.600 clients in more than 60 countries. GPI has been listed on the Borsa Italiana in 2016 (AIM segment) and it has moved to MTA market in 2018.

www.gpi.it

It follows the style of your pharmacy

RIEDL Phasys can be covered with standard panels or with customisable finishes to match with the style of your pharmacy. The use of glass panels (trasparent or fumé) lets your customers enjoy the technological core of your pharmacy.

It fits into the available space

The different configurations of RIEDL Phasys enable the system to fit into the available space in your pharmacy.

Integrating part of the furniture

The use of external shelves, that can be attached directly to the main structure of RIEDL Phasys, let the front side of the system become a furniture component integrated in your pharmacy.

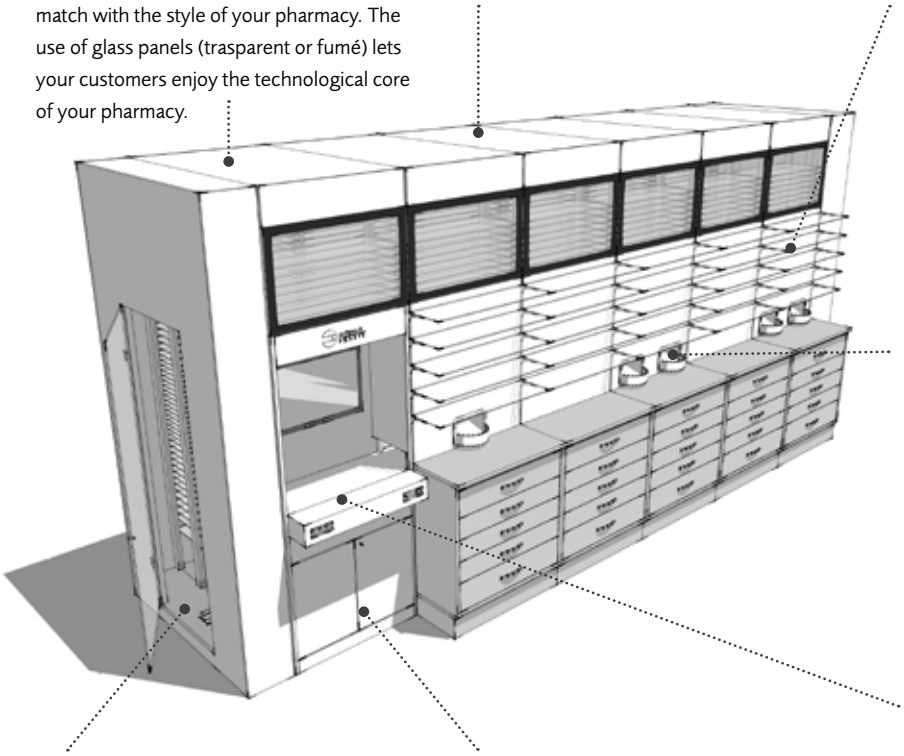

Have drugs delivered wherever you want, in few seconds

The number and the position of the output points are customisable. With the optional delivery systems, packs can reach any point in the pharmacy at an incomparable speed of each gripper.

Safety first

All entries inside the machine are protected by certified security systems which, in case of opening, instantly stop the gripper.

Light bill

The low friction, the low weight of the gripper and the integrated KERS allow to reduce to the minimum medium and peak consumption (similar to common household). For this reason RIEDL Phasys doesn't require any adjustment of the electrical system of your pharmacy.

Storing drugs has never been so easy... and fast

The semi-automatic multi-picking loading system of RIEDL Phasys is accurate and easy to use. It enables to load up to 900 packs per hour. For each pack it's possible to enter its expiry date and batch with a single click, if required.

Layout

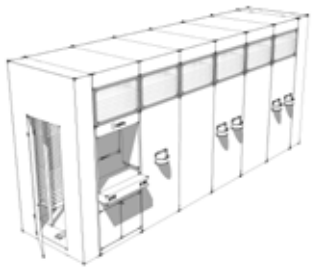

I - Shape

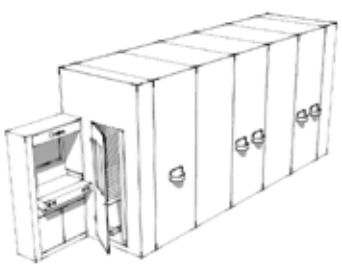

External Loading Bay

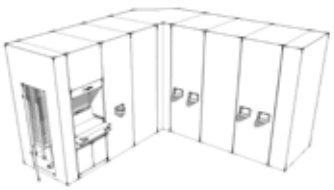

L-Shape

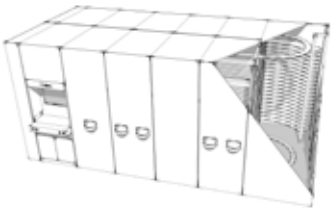

U-Shape

Technical Datasheet

Dimensions	Width	1.606 mm/ 63.23 Inch
	Height	from 2.219 mm/87.36 in to 3.519 mm/ 138.54 in (pitch 100 mm/3.94 in)
	Length	from 3.768 mm/148.23 in, no maximum limit
Performances	Semi-automatic loading	≤ 3 sec. per pack
	Automatic loading (optional)	240 pack/hour
	Unloading	~ 10 sec. per movement (up to 8 packs)
Accepted packs	min. size	12 x 10 x 40 mm / 0.47 x 0.39 x 1.57 in
	max. size	180 x 120 x 300 mm / 7.08 x 4.72 x 11.81 in
	min. diameter	40 mm / 1.57 in
	max. diameter	180 mm / 7.08 in
	min. weight	5 g / 0.1764 oz
	max. weight	1.200 g / 2 lb 10.33 oz per pack
		(maximum weight on gripper: 2.500 g / 5 lb 8.185 oz)
Barcode	1D and 2D	
Voltage	100-240V±10% 50/60 Hz	
Power consumption	at work	0,39 kW/h (excluding any internal lighting system)
	in stand by	0,24 kW/h (excluding any internal lighting system)
	emergency mode	0,19 kW/h
Transport system	Conveyor belts, spiral chutes (diameter 410 mm), lifts, pneumatic tube	
Optional components	Additional gripping units ● Fully automatic loading system ● Phasys Cleaning System ● Basket Phasys automatic replenishment system ● RIEDL OCR reading and recognition system for the expiry date ● RIEDL Integrated Drawers ● Phasys 24 vending machine	
Safety	UPS, computer backup, remote monitoring, rapid replacement of the gripper, automatic alignment of packs on the shelves.	

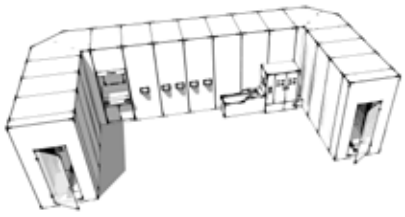

C-Shape

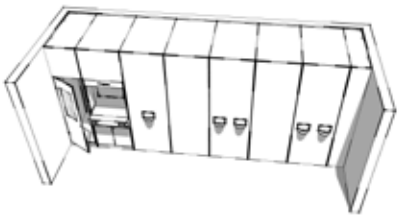

Front Door

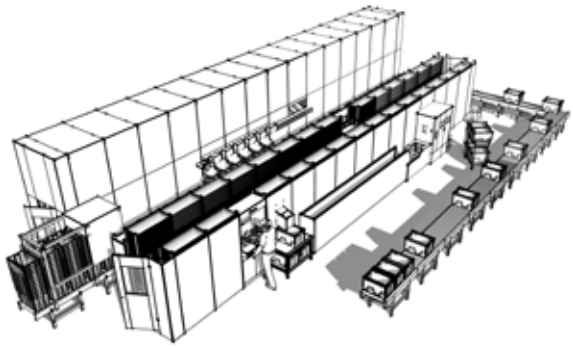

Big Systems

RIEDL PHASYS - V1 - ENG - 2021

GPI SpA
38123 Trento (TN) - Italy
Via Ragazzi del '99, n. 13
T +39 0461 381 515

commerciale@riedlautomation.com
riedlautomation.com

RIEDL a brand of GPI